Dual Frequency Diesel Genset

MODEL	EC-69D
Prime Power (50HZ)	45KW/50KVA
Standby Power (50HZ)	50KW/63KVA
Prime Power (60HZ)	50KW/63KVA
Standby Power (60HZ)	55KW/69KVA

STANDARD FEATURES

General Features:

- Engine（Cummins 4BTA3.9-G2）
- Radiator 50°C max，fans are driven by belt, with safety guard
- 24V charge alternator
- Alternator(Engga, Fraday or Equal）,single bearing alternator IP22/IP23, insulation class H/H.
- Absorber
- Dry type air filter, double fuel filter, oil filter, coolant filter
- Main line circuit breaker
- Standard control panel
- 12V batteries, rack and cable
- Ripple flex exhaust pipe, exhaust siphone, flange, muffler
- Tools kits
- User manual

GENERAL RATINGS

Voltage	HZ	Phase	P.F (COSΦ)	Standby Ratings (KW/KVA)	Prime Ratings (KW/KVA)
400/230	50	3	0.8	50/63	45/50
440/254	60	3	0.8	55/69	50/63

Prime Power (PRP): Prime power is available for an unlimited number of annual hours in variable load application, in accordance with GB/T2820-97（eqvISO8528）; A 10% overload capability is available for a period of 1 hour within a 12-hour period of operation.

Standby Power Rating (ESP): The standby power rating is applicable for supplying emergency power for the duration of a utility power interruption. No overload, utility parallel or negotiated outage operation capability is available at this rating.

SALES PROMISES

Ettes Power provides a full line of brand new and high quality products. Each and every unit is strictly factory

ETTES POWER MACHINERY CO., LTD.
Add: No.188, Anshan West Road, Nankai District, Tianjin, China. / Website: www.ettespower.com
Tel: +86-22-58112239/13672013688 Fax:+86- 22-58112272/ Email: sales@ettespower.com
★We observe the rights of data adjustment without prior notice

tested. Warranty is according to our standard conditions: 12 months or 1,500 running hours, subject to the earlier one. And what's more, Cummins gensets enjoy world-wide united Warranty from Cummins engine agency or service centre at the client's local side.

ENGINE DATA	
Manufacturer / Model:	Cummins 4BTA3.9-G2, 4-Cycle
Air Intake System:	Turbo, Water/Air Cooling
Fuel System:	A Type fuel pump
Cylinder Arrangement:	4 in Line
Displacement:	3.9 L
Bore and Stroke:	102×120 (mm)
Compression Ratio:	16.5:1
Rated RPM:	1500/1800
Max. Standby Power at Rated RPM:	65KW/88HP
Governor Type:	Electronic Speed Control System
Frequency Regulation, Steady State:	≤1.5%
Exhaust System	
Exhaust Gas Flow:	14.8 m3/min
Exhaust Temperature:	497℃
Max Back Pressure:	10kPa
Air Intake System	
Max Intake Restriction:	6.2kPa
Burning Capacity:	5.9m3/min
Air Flow:	158m3/min
Fuel System	
100%(Prime Power) Load:	216g/kw.h
75%(Prime Power) Load:	214g/kw.h
50%(Prime Power) Load:	221g/kw.h
Oil System	
Total Oil Capacity:	16.4L
Oil Consumption:	≤4g/kw.h
Engine Oil Tank Capacity:	14.3L
Oil Pressure at Rated RPM:	350kPa
Cooling System	
Total Coolant Capacity:	24L
Thermostat:	82-95℃
Max Water Temperature:	100℃

ETTES POWER MACHINERY CO., LTD.
Add: No.188, Anshan West Road, Nankai District, Tianjin, China. / Website: www.ettespower.com
Tel: +86-22-58112239/13672013688 Fax:+86- 22-58112272/ Email: sales@ettespower.com
ISO 9001 CE
★We observe the rights of data adjustment without prior notice

Dual Frequency Diesel Genset

ALTERNATOR SPECIFICATION

GENERAL DATA

Compliance with GB755, BS5000, VDE0530, NEMAMG1-22, IED34-1, CSA22.2 and AS1359 standards.

Alternator Data	
Manufacturer / Type:	Engga, Fraday or Equal
Number of Phase:	3
Connecting Type:	3 Phase and 4 Wires, “Y” type connecting
Number of Bearing:	1
Power Factor:	0.8
Protection Grade:	IP22/IP23
Altitude:	≤1000m
Exciter Type:	Brushless, self-exciting
Insulation Class, Temperature Rise:	H/H
Telephone Influence Factor (TIF):	＜50
THF:	＜2%
Voltage Regulation, Steady State:	≤±1%
Alternator Capacity:	73KVA
Alternator Efficiencies:	90%
Air Cooling Flow:	0.216m^3/s

GENERATING SET DATA

Voltage Regulation:	≥±5%
Voltage Regulation, Stead State:	≤±1%
Sudden Voltage Warp (100% Sudden Reduce):	≤+25%
Sudden Voltage Warp (Sudden Increase):	≤-20%
Voltage Stable Time (100% Sudden Reduce):	≤6S
Voltage Stable Time (Sudden Increase)	≤6S
Frequency Reduce:	⩽5% Adjustable
Frequency Regulation, Stead State:	≤1.5%
Frequency Waving:	≤0.8%
Sudden Frequency Warp (100% Sudden Reduce):	≤+12%
Sudden Frequency Warp (Sudden Increase):	≤-10%
Frequency Recovery Time (100% Sudden Reduce):	≤5S
Frequency Recovery Time (Sudden Increase):	≤5S

ETTES POWER MACHINERY CO., LTD.
Add: No.188, Anshan West Road, Nankai District, Tianjin, China. / Website: www.ettespower.com
Tel: +86-22-58112239/13672013688 Fax:+86- 22-58112272/ Email: sales@ettespower.com
★We observe the rights of data adjustment without prior notice

Dual Frequency Diesel Genset

Options

Engine	Fuel System	Control System
● Heater	● Daily Fuel Tank ● Water Separator	● Remote Control Panel ● Auto Transfer Switch (ATS) Control Panel ● Paralleling System ● Electricity Output Cabinet

Alternator	Others	Data
● Anti Condensation Heater ● Permanent Magnet Generator（PMG） ● Drop CT（For Paralleling）	● Rainproof Type ● Soundproof Type ● Trailer Type	● Engine Parts Drawing List ● Spare Parts

Dimension & Weight

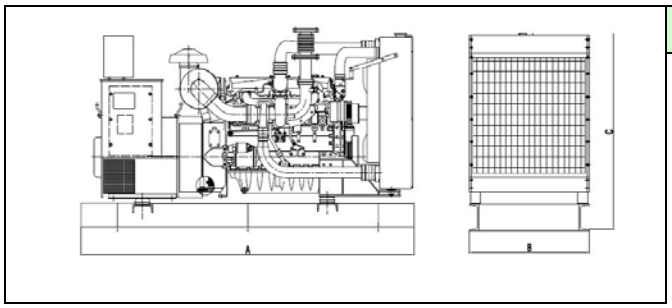

Standard Configuration (Open Type)
Overall Size: 2000（mm）×760（mm）×1450（mm）
Weight: 930 kg

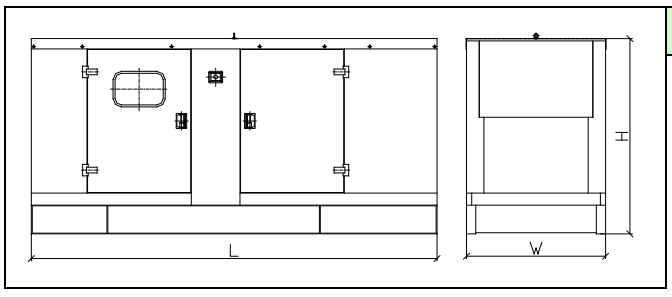

Soundproof Type
Overall Size: 2700（mm）×1150（mm）×1750（mm）
Weight: 1450 kg

Complete Solutions for Diesel & Gas Generating Stations
ETTES POWER MACHINERY CO., LTD.
Add: No.188, Anshan West Road, Nankai District, Tianjin, China. / Website: www.ettespower.com
Tel: +86-22-58112239/13672013688 Fax:+86- 22-58112272/ Email: sales@ettespower.com
★We observe the rights of data adjustment without prior notice

Dual Frequency Diesel Genset

Standard Control Panel

Standard Control Panel is the basic configuration for normal operation and usage, adopting Automatic controller or Deepsea DSE Series (LCD Display) . It is of some advantages such as easy to operate, various function and well protection. Operative buttons such as Turn On, Per-heat, Starting, Stop (Emergency Stop) on the panel. While malfunction occurs, control panel will stop the generator and also alarm with light or buzz.

Auto Module Control Panel

Automatic Control Panel is the basic configuration for nobody on duty controlling generators. This kind of panel can accept the remote start/stop signals. (Controlled by ATS)

Features: adopted Czech Comap Brand auto control system, with large LCD display in English (or Chinese) to show the menu. With Auto Control Panel, generator are of various functions such as auto/manual stop (emergency stop), programmable plugs for input and output, detected data, symbols, diagram will show in the LCD, etc.

Auto Remote Control Panel

Automatic Remote Control Panel is based on the Auto Control Panel and add the standard communication plugs: RS-232 (Modbus Communication Agreement). With Auto Remote Control Panel, it can realize remote control, remote detective, remote report by user using communicative net or center inspect and control system.

ETTES POWER MACHINERY CO., LTD.
Add: No.188, Anshan West Road, Nankai District, Tianjin, China. / Website: www.ettespower.com
Tel: +86-22-58112239/13672013688 Fax:+86- 22-58112272/ Email: sales@ettespower.com

★We observe the rights of data adjustment without prior notice